COURTS & LANES SPECIAL PERMIT
21-27 HANCOCK STREET
LEAVITT COURT IMPROVEMENTS

NEWBURYPORT, MASSACHUSETTS
PREPARED FOR:
CASWELL DEVELOPMENT
24 GRAF ROAD
NEWBURYPORT MA

LEGEND OF SYMBOLS & ABBREVIATIONS:

EXISTING:		PROPOSED:
	PROPERTY LINE	
	BORDERING VEGETATED WETLAND	N/A
	BUFFER ZONE TO RESOURCE AREA	N/A
102	INTERMEDIATE CONTOUR	102
110	INDEX CONTOUR	110
EP	EDGE OF PAVEMENT	EP
BB	BITUMINOUS BERM	BB
VGC	VERTICAL GRANITE CURB	VGC
SGC	SLOPED GRANITE CURB	SGC
CC	CONCRETE CURB	CC
	GUARD RAIL	
	DRAIN	
	SEWER	
	WATER	
	UNDERGROUND ELECTRIC	
	OVERHEAD WIRE	
	TELEPHONE	
	NATURAL GAS	
	CHAIN LINK FENCE	
	WOOD FENCE	
	SILT FENCE	
	HAY BALES	
	TREE LINE	
	RETAINING WALL	
	STONE WALL	
SB(SET)	STONE BOUND	SB(SET)
CB(SET)	CONCRETE BOUND	CB(SET)
IP(SET)	IRON PIPE	IP(SET)
DH(SET)	DRILL HOLE	DH(SET)
#A-11	WETLAND FLAG	N/A
×	SPOT ELEVATION	103x5
	CATCH BASIN	
DW	DRY WELL	DW
D	DRAIN MANHOLE	D
S	SEWER MANHOLE	S
E	ELECTRIC MANHOLE	E
M	UTILITY MANHOLE	M
	FIRE HYDRANT	
GV	GATE VALVE	GV
	LIGHT	
	UTILITY POLE	
	GUY WIRE	
	WELL	
PMW1	MONITORING WELL	PMW1
T-1	TEST PIT	N/A
	PERCOLATION TEST	N/A
T.B.M.	BENCH MARK	N/A
	TRAFFIC FLOW DIRECTION	
	DRAINAGE FLOW DIRECTION	

OWNER REFERENCES

21-25 HANCOCK STREET

OWNER: G&S MASSACHUSETTS REALTY TRUST

DEED REFERENCE: BK 34044, PG 272

ASSESSORS: MAP 25, PARCEL 42

PLAN REF: LOTS 1, 3, 5, 7 & LEVITT COURT AS SHOWN ON PLAN RECORDED IN BOOK 2342 PAGE 600

27 HANCOCK STREET

OWNER: WILLIAM & JOYCE COLBY

DEED REFERENCE: BK 7229, PG 301

ASSESSORS: MAP 25, PARCEL 43

PLAN REF: LOTS 1, 3, 5, 7 & LEVITT COURT AS SHOWN ON PLAN RECORDED IN BOOK 2342 PAGE 600

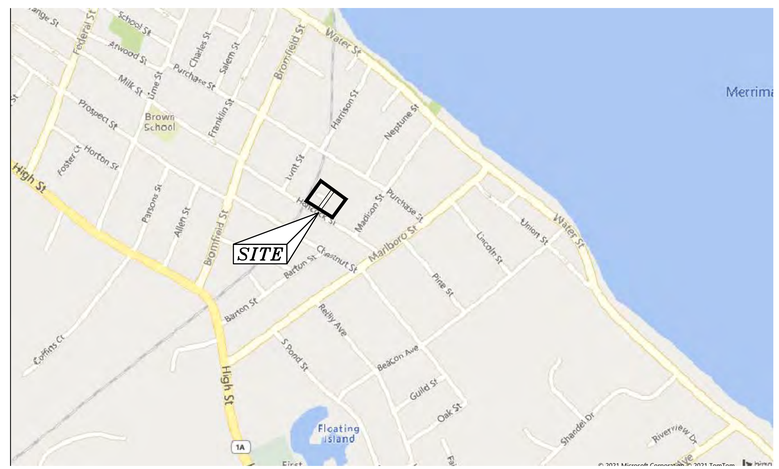

LOCUS PLAN
SCALE: 1"=500'±

FOR REGISTRY OF DEEDS USE ONLY

"I CERTIFY THAT THIS PLAN CONFORMS TO THE RULES AND REGULATIONS OF THE REGISTERS OF DEEDS OF THE COMMONWEALTH OF MASSACHUSETTS."

ROADWAY CONSTRUCTION WAIVERS

6.8.1 - (TABLES) MINIMUM RIGHT OF WAY WIDTH OF 40' REQUIRED. LEVITT COURT IS AN EXISTING 25' PRIVATE WAY TO BE IMPROVED.

6.8.1- (TABLES) PROVIDE CUL-DE-SAC OR T / Y TURNAROUND. NO CUL-DE-SAC OR TURNAROUND PROPOSED. ALL BUILDINGS TO INCLUDE FIRE SUPPRESSION SPRINKLER SYSTEM AND TOTAL ROAD LENGTH ONLY 150'. TURN AROUND PROVIDED FOR BACKING OF CARS OUT OF TWO DRIVEWAYS AT AND OF LEAVITT COURT.

6.8.1- (TABLES) CURB RADIUS OF 25 FEET AT INTERSECTION. 12 FEET IS PROPOSED AT INTERSECTION WITH HANCOCK STREET .

6.9 CURBING - 6" VERTICAL GRANITE REQUIRED, GRANITE CURBING ONLY PROVIDED AT THE INTERSECTION WITH HANCOCK STREET.

6.11.1 SIDEWALKS - SIDEWALK REQUIRED ON ONE SIDE OF ROAD - NO SIDEWALKS PROPOSED.

PRIVATE MAINTENANCE NOTE -THE ROADWAY, UTILITIES AND DRAINAGE FACILITIES TO BE PRIVATELY MAINTAINED IN ACCORDANCE WITH THE HOMEOWNERS ASSOCIATION AGREEMENT.

WATER DISTRICT:
THE SUBJECT PROPERTY RESIDES IN THE CITY OF NEWBURYPORT WATER DISTRICT

SHEET INDEX:

SHEET No.	DESCRIPTION
T1	TITLE SHEET
S1	EXISTING CONDITIONS PLAN OF LAND
C1	SITE LAYOUT & UTILTIES PLAN
C2	GRADING & DRAINAGE PLAN
D1	CONSTRUCTION DETAILS
D2	EROSION CONTROL PLAN

ZONING MATRIX: RESIDENCE 2

21 HANCOCK STREET	REQUIRED (INDUSTRIAL SERVICE - 607)	EXISTING (INDUSTRIAL SERVICE - 607)	REQUIRED (TWO-FAMILY - 102)	PROPOSED (TWO-FAMILY - 102)
MINIMUM LOT AREA	50,000 SQUARE FEET	16,228 SQUARE FEET	15,000 SQUARE FEET	16,228 SQUARE FEET
MINIMIUM LOT FRONTAGE	200 FEET	96.52 FEET	120 FEET	96.52 FEET
FRONT SETBACK	60 FEET	124.1 FEET	25 FEET	25.0 FEET
SIDE SETBACK (R)	50 FEET	18.3 FEET OVER	20 FEET	21.0 FEET
SIDE SETBACK (L)	50 FEET	5.9 FEET	20 FEET	25.8 FEET
REAR SETBACK	60 FEET	3.8 FEET	25 FEET	25.7 FEET
MAXIMIUM LOT COVERAGE(%)	30.0%	22.3%	25.0%	22.5%
MAXIMIUM HEIGHT	35 FEET	12 FEET	35 FEET	25 FEET
MINIMIUM OPEN SPACE	N/A	46.7%	40.0%	67.0%
MINIMIUM PARKING REQUIRED	?	4+	4	4+

27 HANCOCK STREET	REQUIRED (SINGLE-FAMILY - 101)	EXISTING (SINGLE-FAMILY - 101)	REQUIRED (TWO-FAMILY - 102)	PROPOSED (TWO-FAMILY - 102)
MINIMUM LOT AREA	10,000 SQUARE FEET	16,400 SQUARE FEET	15,000 SQUARE FEET	16,400 SQUARE FEET
MINIMIUM LOT FRONTAGE	90 FEET	95.92 FEET	120 FEET	267.40 FEET *
FRONT SETBACK	25 FEET	58.1 FEET	25 FEET	11.7 FEET
SIDE SETBACK (R)	10 FEET	50.7 FEET	20 FEET	31.5 FEET
SIDE SETBACK (L)	10 FEET	5.7 FEET	20 FEET	24.5 FEET
REAR SETBACK	25 FEET	91.1 FEET	25 FEET	25.6 FEET
MAXIMIUM LOT COVERAGE(%)	25.0%	5.0%	25.0%	24.7%
MAXIMIUM HEIGHT	35 FEET	22 FEET	35 FEET	25 FEET
MINIMIUM OPEN SPACE	40.0%	90.7%	40.0%	64.7%
MINIMIUM PARKING REQUIRED	2	0	4	4+

NORTH

Design Consultants Inc.
Somerville - Quincy - Newburyport
www.dci-ma.com

DEVELOPER:
CASWELL DEVELOPMENT
24 GRAF ROAD
NEWBURYPORT MA

ARCHITECT:
GRAF ARCHITECTS
2 LIBERTY STREET
NEWBURYPORT MA

SURVEYOR
WINTER GEC
44 MERRIMAC ST. UNIT 312
NEWBURYPORT, MA

PROJECT TEAM

21-27 HANCOCK
NEWBURYPORT, MA.

PROJECT INFO

REV	DESCRIPTION	DATE

COMMONWEALTH OF MASSACHUSETTS
STEPHEN B. SAWYER
No. 34824
REGISTERED PROFESSIONAL ENGINEER

STAMP:

TITLE SHEET

SHEET NAME:

T1

SHT NO:

DR BY: GS
CHK BY: SS
PROJ NO: 20-087
DATE: 02-17-2021
SCALE: NOT TO SCALE

P:\2020 Projects\2020-087 Leavitt Ct Newburyport\Dwg_ENGINEERING\20-087_TITL_SHET.dwg

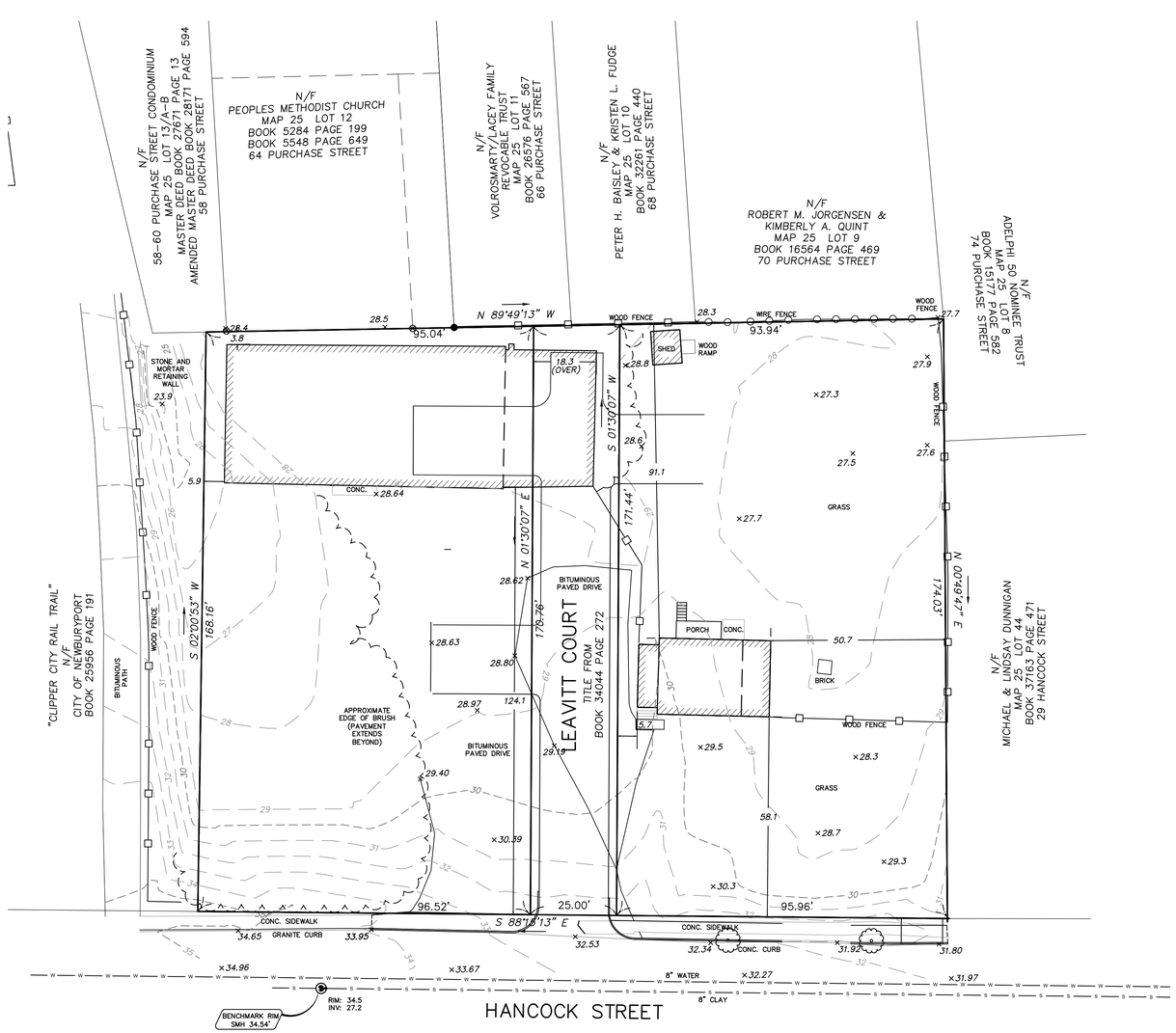

0 10 20 40

SCALE in FEET
1"=20'

NOTES

THE PURPOSE OF THIS PLAN IS TO DEPICT PARCELS AS SHOWN ON PLAN RECORDED IN BOOK 2342 PAGE 600. LEAVITT COURT IS AS SHOWN ON SAID PLAN. PHYSICAL FEATURES AND BOUNDARIES ARE THE RESULT OF AN ON-THE-GROUND INSTRUMENT SURVEY PERFORMED ON OCTOBER 15 AND 20, 2020.

OWNERSHIP INFORMATION USED IN THE PREPARATION OF THIS PLAN WAS OBTAINED FROM THE CITY OF NEWBURYPORT ASSESSOR'S OFFICES AND SOUTHERN ESSEX DISTRICT REGISTRY OF DEEDS.

UNDERGROUND UTILITIES SHOWN HEREON BASED ON UTILITY EVIDENCE VISIBLE AT GROUND SURFACE AND RECORD DRAWINGS AND ARE SUBJECT TO FIELD VERIFICATION BY EXCAVATION. UTILITIES SHOWN DO NOT PURPORT TO CONSTITUTE OR REPRESENT ALL UTILITIES LOCATED UPON OR ADJACENT TO THE SURVEYED PREMISES. POINT OF ENTRY FOR UTILITIES ARE AS SHOWN. UTILITY ENTRY POINTS NOT SHOWN ARE UNKNOWN.

P.L.S. _____

EVERETT J. CHANDLER, P.L.S.
MASS. REGISTRATION NO. 41783

LOCUS TITLE INFORMATION

21 HANCOCK STREET

OWNER:	G&S MASSACHUSETTS REALTY TRUST
DEED REFERENCE:	BOOK 34044 PAGE 272
ASSESSORS:	MAP 25 PARCEL 42
PLAN REF:	LOTS 1, 3, 5, 7 & LEAVITT COURT AS SHOWN ON PLAN RECORDED IN BOOK 2342 PAGE 600

27 HANCOCK STREET

OWNER:	WILLIAM F. & JOYCE E. COLBY
DEED REFERENCE:	BOOK 7229 PAGE 301
ASSESSORS:	MAP 25 PARCEL 43
PLAN REF:	LOTS 2, 4, 6 & 8 AS SHOWN ON PLAN RECORDED IN BOOK 2342 PAGE 600

Copyright 2021 Winter GEC, LLC

Winter GEC, LLC
44 MERRIMAC STREET
NEWBURYPORT, MA 01950
978-270-8626

SCALE:
HORIZ: 1"= 20'
VERT: _____

NO.	DATE	BY	REVISIONS

FIELD: CO
CALCS: EC
CHECKED: EJC
APPROVED: EJC

LIMITED EXISTING CONDITIONS

21 & 27 HANCOCK STREET

PLAN OF LAND IN
NEWBURYPORT, MA
SURVEYED FOR
CASWELL DEVELOPMENT, LLC

PROJECT NO. 2020-21-27HANCOCK
DATE: JAN 20, 2021
SHEET NO. 1 OF 1

FOR REGISTRY OF DEEDS USE ONLY

"I CERTIFY THAT THIS PLAN CONFORMS TO THE RULES AND REGULATIONS OF THE REGISTERS OF DEEDS OF THE COMMONWEALTH OF MASSACHUSETTS."

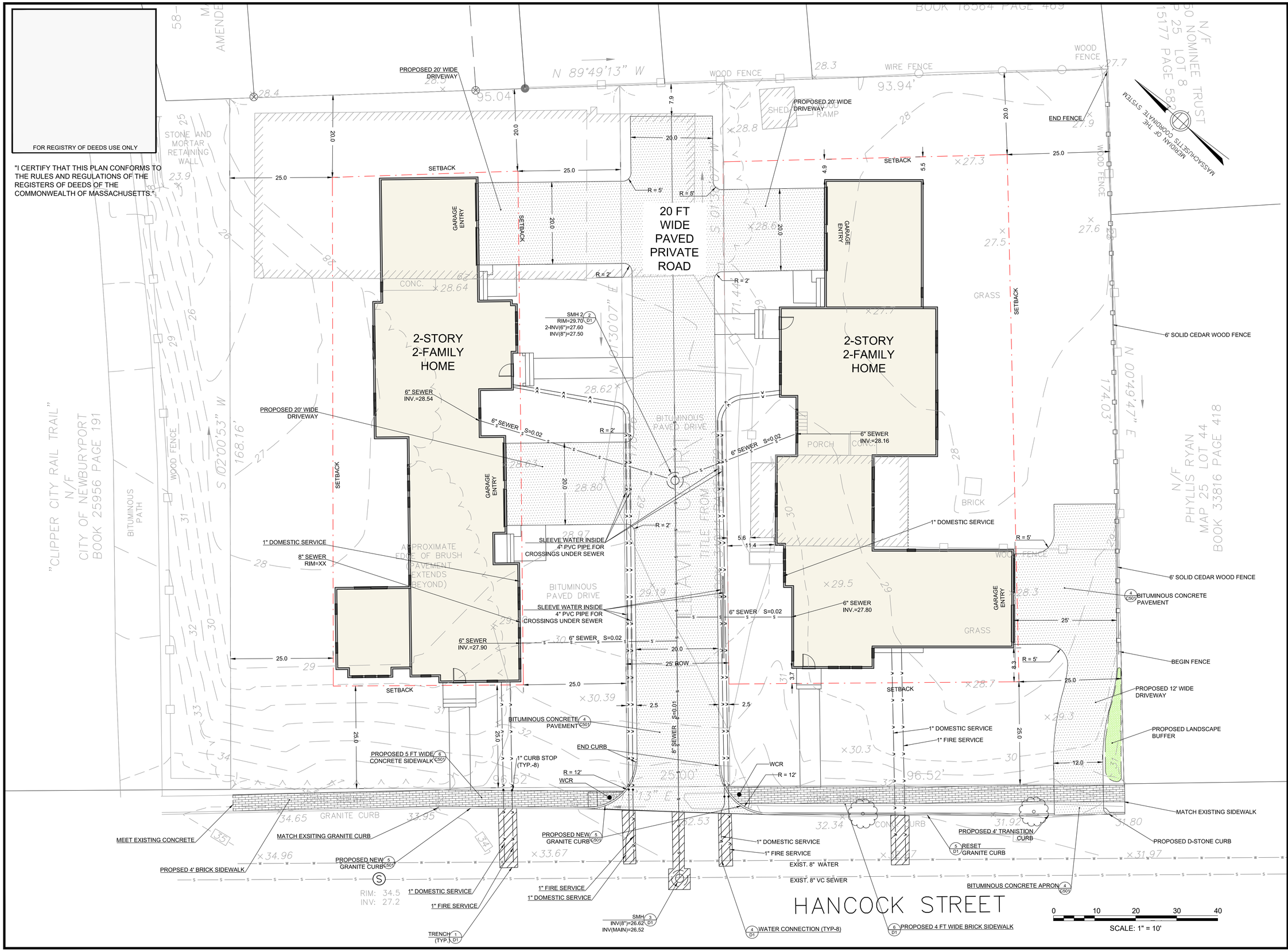

NORTH

Design Consultants Inc.
Somerville - Quincy - Newburyport
www.dci-ma.com

DEVELOPER:
CASWELL DEVELOPMENT
24 GRAF ROAD
NEWBURYPORT MA

ARCHITECT:
GRAF ARCHITECTS
2 LIBERTY STREET
NEWBURYPORT MA

SURVEYOR
WINTER GEC
44 MERRIMAC ST. UNIT 312
NEWBURYPORT, MA

PROJECT TEAM

21-27 HANCOCK
NEWBURYPORT, MA.

PROJECT INFO

REV	DESCRIPTION	DATE

COMMONWEALTH OF MASSACHUSETTS
STEPHEN B. SAWYER
CIVIL
No. 35811
REGISTERED PROFESSIONAL ENGINEER

STAMP:

LAYOUT & UTILTIES PLAN

SHEET NAME:

C1

SHT NO:

DR BY: GS
CHK BY: SS
PROJ NO: PLAN
DATE: 12/14/2020
SCALE: 1"=10'

P:\2020 Projects\2020-087 Leavitt Ct Newburyport\Dwg_ENGINEERING\20-087_LAYT_MATL.dwg

* ALL GUTTERS TO BE PIPED TO INFILTRAION CHANBERS.

* *THE PROJECT REDUCES IMPERVIOUS SURFACES AND AS SUCH REDUCES OFFSITE STORMATER FLOW FROM THE PROPERTY

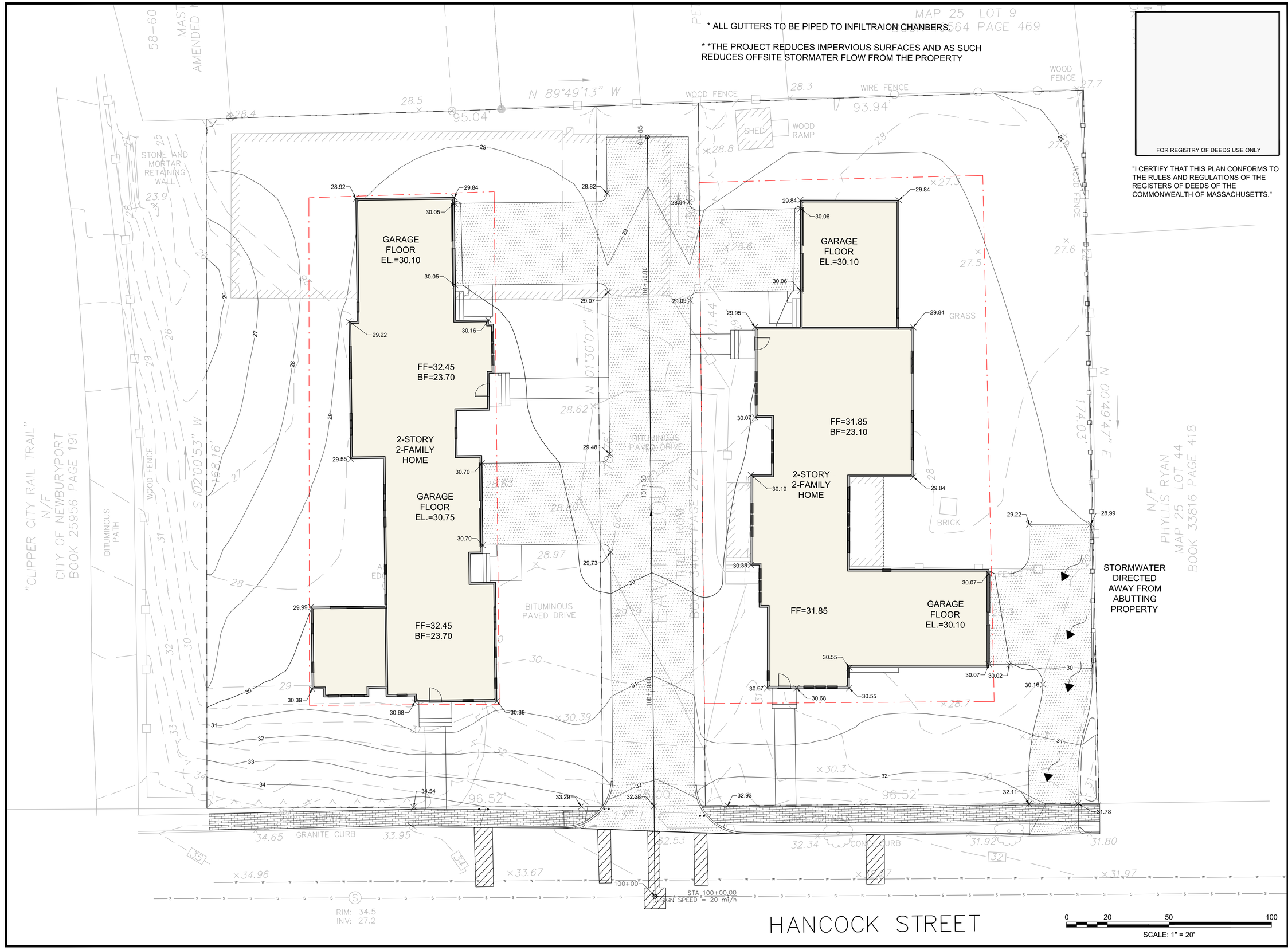

FOR REGISTRY OF DEEDS USE ONLY

"I CERTIFY THAT THIS PLAN CONFORMS TO THE RULES AND REGULATIONS OF THE REGISTERS OF DEEDS OF THE COMMONWEALTH OF MASSACHUSETTS."

NORTH

Design Consultants Inc.
Somerville - Quincy - Newburyport
www.dci-ma.com

DEVELOPER:
CASWELL DEVELOPMENT
24 GRAF ROAD
NEWBURYPORT MA

ARCHITECT:
GRAF ARCHITECTS
2 LIBERTY STREET
NEWBURYPORT MA

SURVEYOR
WINTER GEC
44 MERRIMAC ST. UNIT 312
NEWBURYPORT, MA

PROJECT TEAM

21-27 HANCOCK
NEWBURYPORT, MA.

PROJECT INFO

REV	DESCRIPTION	DATE

STAMP:

COMMONWEALTH OF MASSACHUSETTS
STEPHEN B. SAWYER
CIVIL
No. 35256
REGISTERED PROFESSIONAL ENGINEER

GRADING & DRAINAGE PLAN

SHEET NAME:

C2

SHT NO:

DR BY: GS
CHK BY: SS
PROJ NO: 20-087
DATE: 02/17/2021
SCALE: 1"=10'

P:\2020 Projects\2020-087 Leavitt Ct Newburyport\Dwg_ENGINEERING\20-087_GRAD_DRAN.dwg

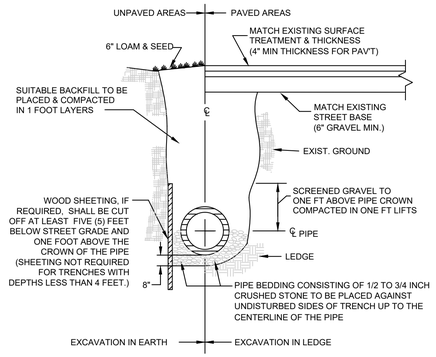

1 UTILITY TRENCH
NOT TO SCALE

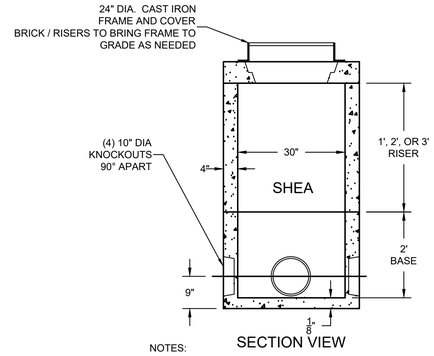

NOTES:

1. CONCRETE: 5,000 PSI MINIMUM AFTER 28 DAYS.
2. DESIGNED FOR AASHTO HS-20 LOADING, 1-5 FEET COVER.

2 SMH (30" FLAT TOP)
NOT TO SCALE

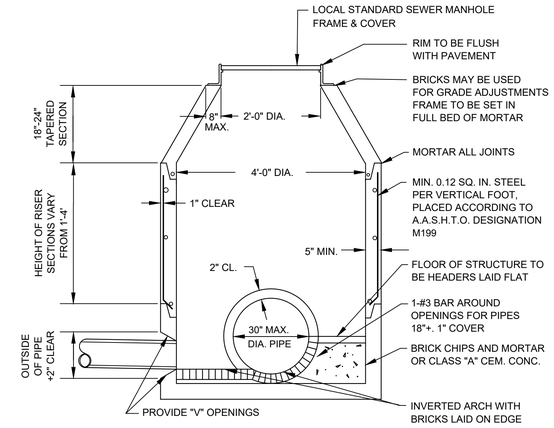

3 STANDARD SEWER MANHOLE
NOT TO SCALE

FOR REGISTRY OF DEEDS USE ONLY

"I CERTIFY THAT THIS PLAN CONFORMS TO THE RULES AND REGULATIONS OF THE REGISTERS OF DEEDS OF THE COMMONWEALTH OF MASSACHUSETTS."

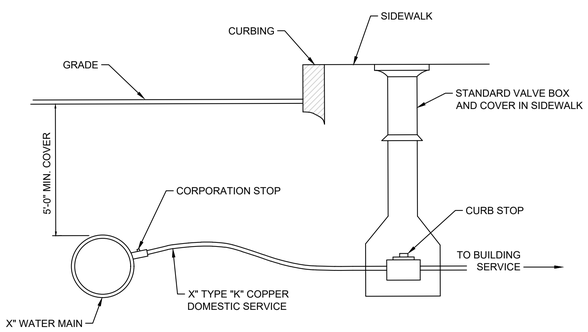

4 COPPER WATER SERVICE CONNECTION
NOT TO SCALE

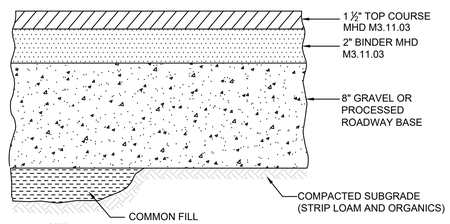

NOTE:

1. SEE SITE LAYOUT PLAN FOR PAVEMENT WIDTH AND LOCATION.
2. SEE GRADING PLAN FOR PAVEMENT SLOPE AND CROSS-SLOPE.

4 BITUMINOUS CONCRETE PAVEMENT
NOT TO SCALE

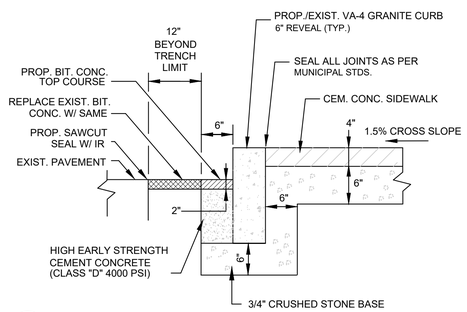

5 VERTICAL GRANITE CURB (NEW OR RESET)
NOT TO SCALE

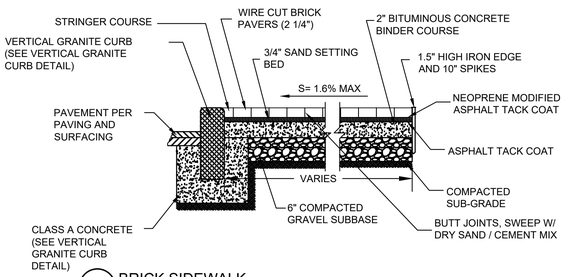

6 BRICK SIDEWALK
NOT TO SCALE

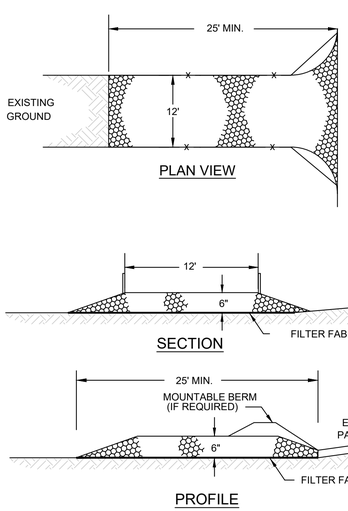

CONSTRUCTION SPECIFICATIONS

STONE SIZE - SEE GRADATION TABLE

LENGTH - 25 FOOT MINIMUM.

THICKNESS - SIX (6) INCHES (MINIMUM).

WIDTH - 12' MINIMUM

FILTER FABRIC - MIRAFI 600X OR APPROVED EQUAL.

INSTALLATION - THE AREA OF THE ENTRANCE SHOULD BE CLEARED OF ALL VEGETATION, ROOTS, AND OTHER OBJECTIONABLE MATERIAL. A ROAD STABILIZATION FILTER CLOTH CAN BE PLACED ON THE SUBGRADE PRIOR TO THE GRAVEL PLACEMENT TO PREVENT PUMPING. THE GRAVEL SHALL BE PLACED TO THE SPECIFIED DIMENSIONS.

MAINTENANCE - THE ENTRANCE SHALL BE MAINTAINED IN A CONDITION WHICH WILL PREVENT TRACKING OR FLOWING OF SEDIMENT ONTO PUBLIC RIGHTS-OF-WAY. THIS WILL REQUIRE PERIODIC TOP DRESSING WITH ADDITIONAL STONE OR ADDITIONAL LENGTH AS CONDITIONS DEMAND AND REPAIR AND/OR CLEANOUT OF ANY MEASURES USED TO TRAP SEDIMENT. ALL SEDIMENT SPILLED, DROPPED, WASHED OR TRACKED ONTO PUBLIC RIGHTS-OF-WAY MUST BE REMOVED IMMEDIATELY.

CRUSHED STONE GRADATION TABLE

SIEVE SIZE	% PASSING BY WEIGHT
2 inches	100
1 1/2 inches	90-100
1 inch	20-55
3/4 inch	0-15
3/8 inch	0-5

7 CONSTRUCTION ENTRANCE
NOT TO SCALE

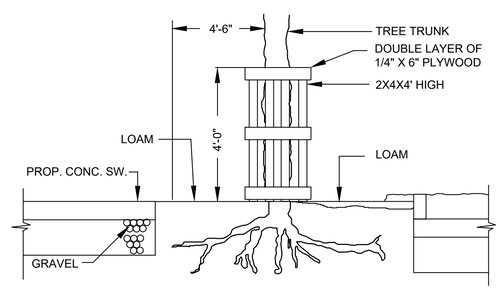

NOTES:

1. RESTRICT PASSAGE OF CONSTRUCTION EQUIPMENT THAT WILL INJURE EXPOSED OR UNDISTURBED TREE ROOTS OR OTHER PARTS OF THE TREE.
2. TREE ROOTS LOCATED LOWER THAN 10" BELOW FINISH GRADE WITHIN TREE PROTECTION WORKING AREA SHALL BE CUT ONLY IF NECESSARY.
3. PROVIDE 2X4X4' HIGH WOOD FRAME CAGE WITH HORIZONTAL PLYWOOD PLANKING AS PROTECTION FOR THE TREE DURING CONSTRUCTION OR AS DIRECTED BY THE ENGINEER.

8 EXISTING TREE PROTECTION
NOT TO SCALE

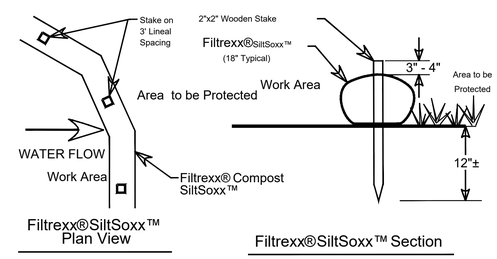

NOTES

1. ALL MATERIAL TO MEET FILTREXX® SPECIFICATIONS.
2. SILTSOXX™ COMPOST/JSOIL/SEED FILL TO MEET APPLICATION REQUIREMENTS.
3. COMPOST MATERIAL TO BE DISPERSED ON SITE, AS DETERMINED BY ENGINEER.

FILTREXX ® SILTSOXX™

9 SILT SOCK
NOT TO SCALE

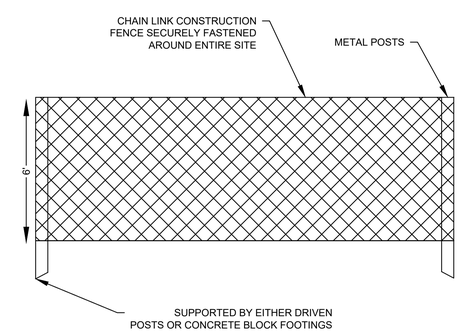

10 CONSTRUCTION FENCE
NOT TO SCALE

NORTH

Design Consultants Inc.
Somerville - Quincy - Newburyport
www.dci-ma.com

DEVELOPER:
CASWELL DEVELOPMENT
24 GRAF ROAD
NEWBURYPORT MA

ARCHITECT:
GRAF ARCHITECTS
2 LIBERTY STREET
NEWBURYPORT MA

SURVEYOR
WINTER GEC
44 MERRIMAC ST. UNIT 312
NEWBURYPORT, MA

PROJECT TEAM

21-27 HANCOCK
NEWBURYPORT, MA.

PROJECT INFO

REV	DESCRIPTION	DATE

STAMP:

CIVIL DETAILS

SHEET NAME:

D1

SHT NO:

DR BY: MCH
CHK BY: SBS
PROJ NO: 20-087
DATE: 02/17/2021
SCALE: NOT TO SCALE

P:\2020 Projects\2020-087 Leavitt Ct Newburyport\Dwg_ENGINEERING\20-087_CIV_DETL.dwg

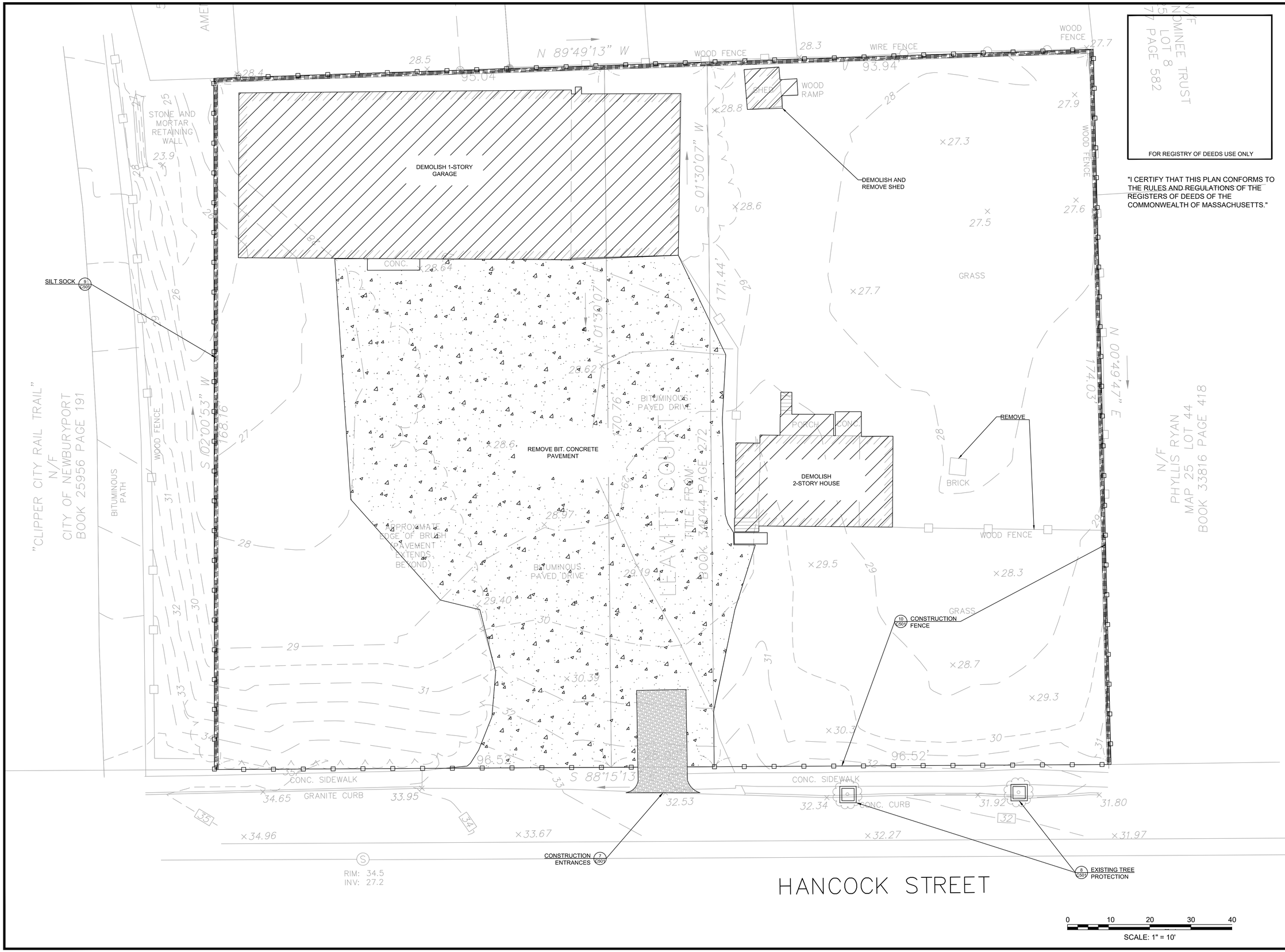

"I CERTIFY THAT THIS PLAN CONFORMS TO THE RULES AND REGULATIONS OF THE REGISTERS OF DEEDS OF THE COMMONWEALTH OF MASSACHUSETTS."

Design Consultants Inc.
Somerville - Quincy - Newburyport
www.dci-ma.com

DEVELOPER:
CASWELL DEVELOPMENT
24 GRAF ROAD
NEWBURYPORT MA

ARCHITECT:
GRAF ARCHITECTS
2 LIBERTY STREET
NEWBURYPORT MA

SURVEYOR
WINTER GEC
44 MERRIMAC ST. UNIT 312
NEWBURYPORT, MA

PROJECT TEAM

21-27 HANCOCK
NEWBURYPORT, MA.

PROJECT INFO

REV	DESCRIPTION	DATE

COMMONWEALTH OF MASSACHUSETTS
STEPHEN B. SAUNDER
CIVIL
No. 34606
REGISTERED PROFESSIONAL ENGINEER

STAMP:

EROSION CONTROL PLAN

SHEET NAME:

D2

SHT NO:

DR BY: GS
CHK BY: SS
PROJ NO: 20-087
DATE: 02/17/2021
SCALE: 1"=10'

P:\2020 Projects\2020-087 Leavitt Ct Newburyport\Dwg_ENGINEERING\20-087_EROS_CNTL.dwg